1

TYPICAL FRAMING AROUND ROOF OPENINGS
(APPLIES TO METAL DECK ROOFS ONLY)

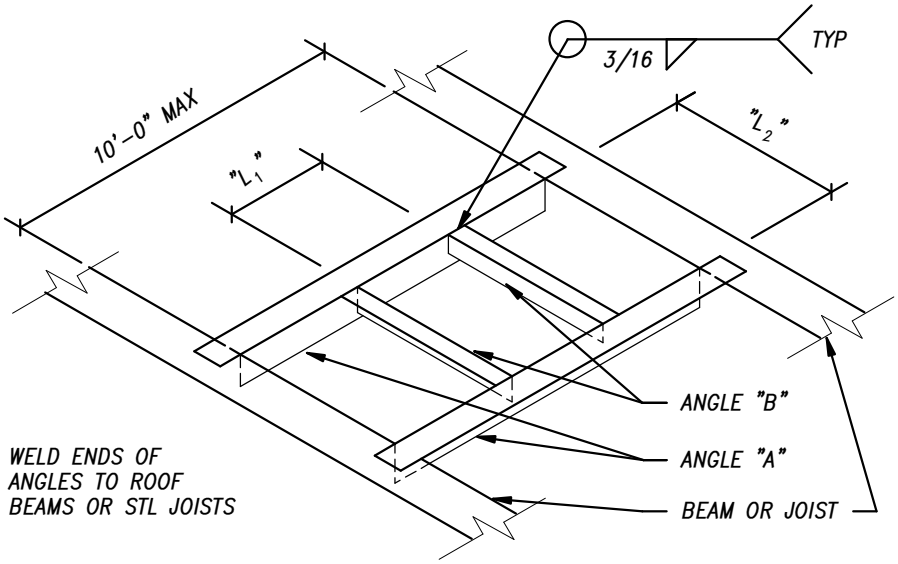

"L_1" OR "L_2" (USE LARGER VALUE)	ANGLE "A"	ANGLE "B"
UP TO 2'-0"	4x3x1/4 (LLV)	4x3x1/4 (LLV)
UP TO 4'-0"	5x3x1/4 (LLV)	5x3x1/4 (LLV)
UP TO 6'-0"	5x3x5/16 (LLV)	5x3x5/16 (LLV)
UP TO 8'-0"	6x4x5/16 (LLV)	6x4x5/16 (LLV)
UP TO 10'-0"	6x4x3/8 (LLV)	6x4x3/8 (LLV)

USE ABOVE FRAMING AT ALL ROOF OPENINGS WHERE EITHER "L_1" OR "L_2" EXCEEDS 12" - UNLESS NOTED OTHERWISE.

FOR PENETRATIONS < 12" ROUND OR SQUARE, SEE TYPICAL REINFORCING AT ROOF DECK PENETRATIONS DETAIL.

OBTAIN LOCATIONS AND DIMENSIONS OF MEP OPENINGS FROM MEP CONTRACTORS - MAX UNIT WEIGHT = 4,000 LBS

KL&A, Inc.
215 N. 12 St.
Carbondale, Colorado 81623
P: (970) 927 5174
Golden, CO • Denver, CO • Loveland, CO • Buffalo, WY

HUMPHRIES POLI ARCHITECTS
2100 DOWNING STREET | DENVER, COLORADO 80205 | P: 303.607.0040 | F: 303.607.0041 | HPARCH.COM

COOPER COMMONS Colorado Mountain College / Garfield County Public Library	PROJECT NO.B0736 SCALE: NTS ISSUED: 09/08/16
TYPICAL ROOF OPENING FRAMING (7/S-102)	Drawing Number ADD2-S1